Ergotron®

Dimensional & Range of Motion Illustrations

WorkFit-A, Single LCD Mount, LD

Weight Capacity

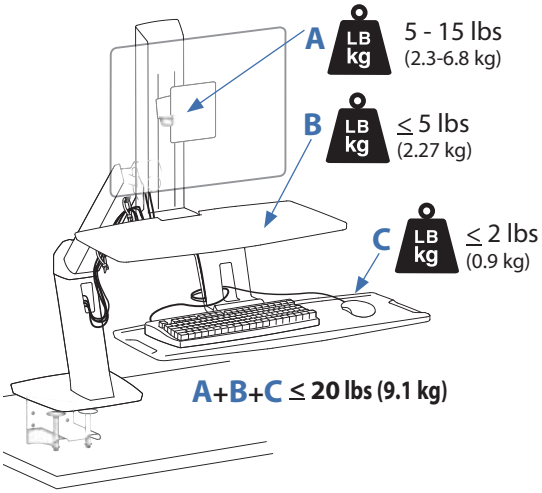

Range of Motion

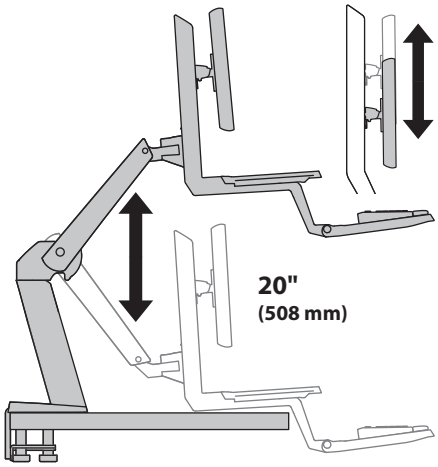

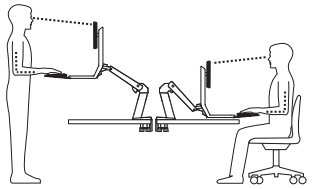

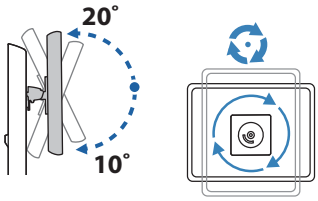

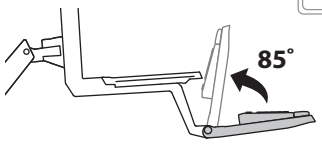

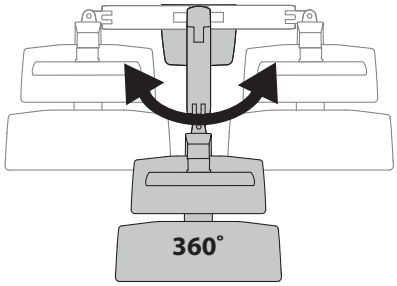

Dimensions

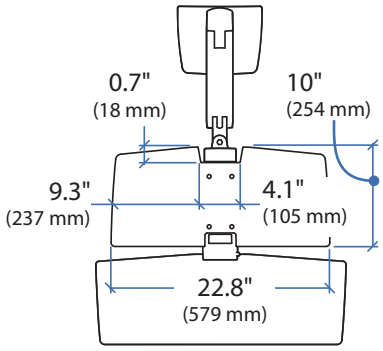

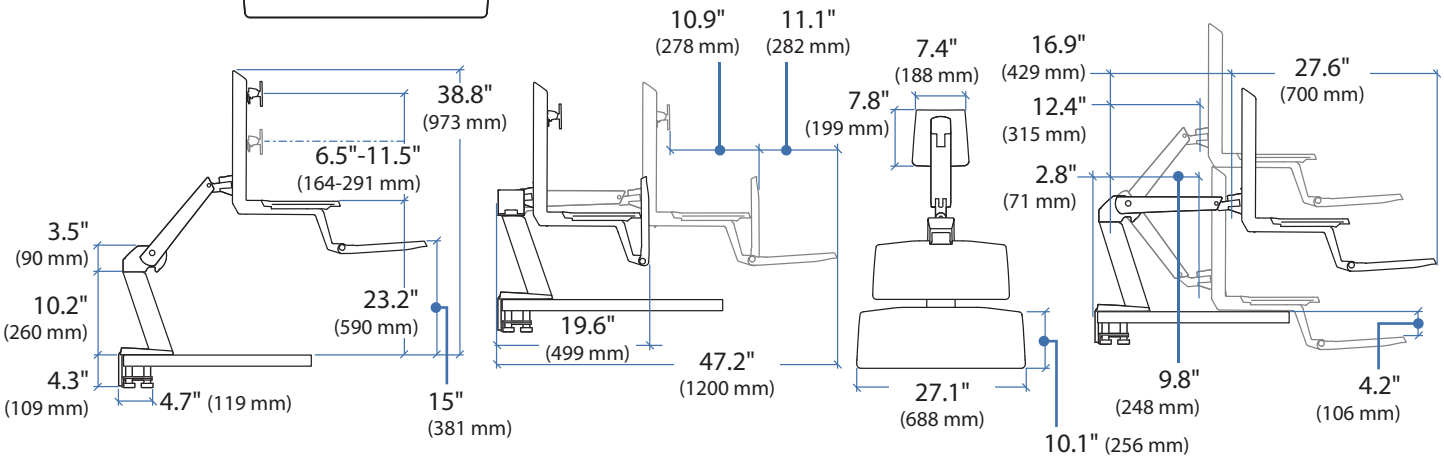

see page 4 for Desk Specifications.

© 2014 Ergotron, Inc. rev. 06/30/2014 DIM-WorkFit-A-dropdownKB Content is subject to change without notification

Americas Sales and Corporate Headquarters	EMEA Sales	APAC Sale	Worldwide OEM Sales
St. Paul, MN USA (800) 888-8458 +1-651-681-7600 www.ergotron.com sales@ergotron.com	Amersfoort, The Netherlands +31 33 45 45 600 www.ergotron.com info.eu@ergotron.com	Tokyo, Japan www.ergotron.com apaccustomerservice@ergotron.com	www.ergotron.com info.oem@ergotron.com

ERGOTRON®

Ergotron®

Dimensional & Range of Motion Illustrations

WorkFit-A, Single LCD Mount, HD

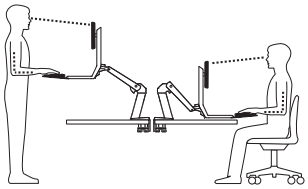

Weight Capacity

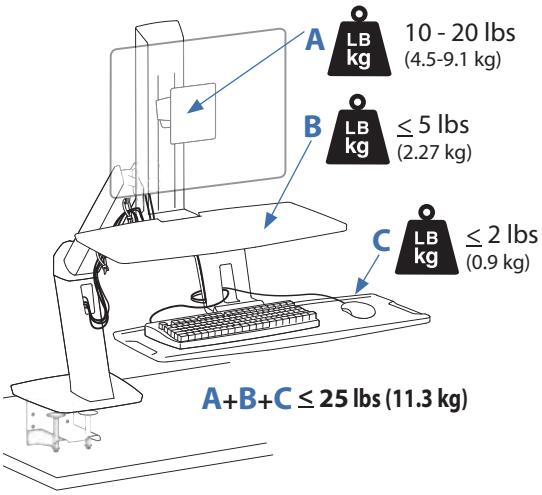

Range of Motion

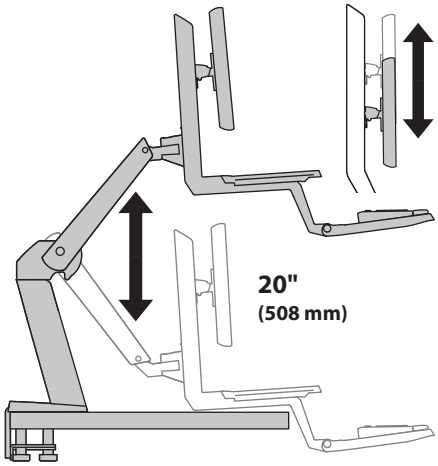

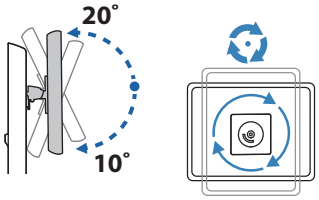

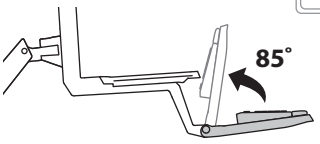

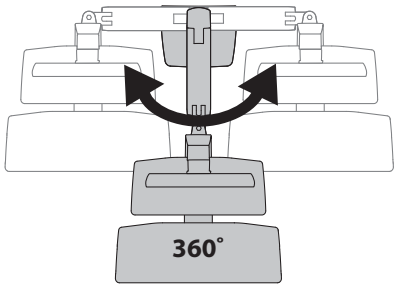

Dimensions

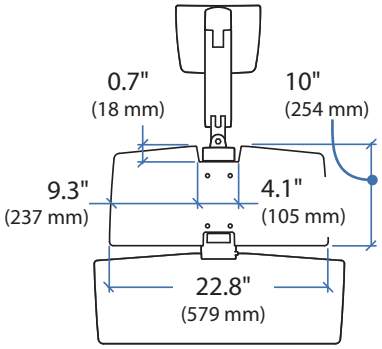

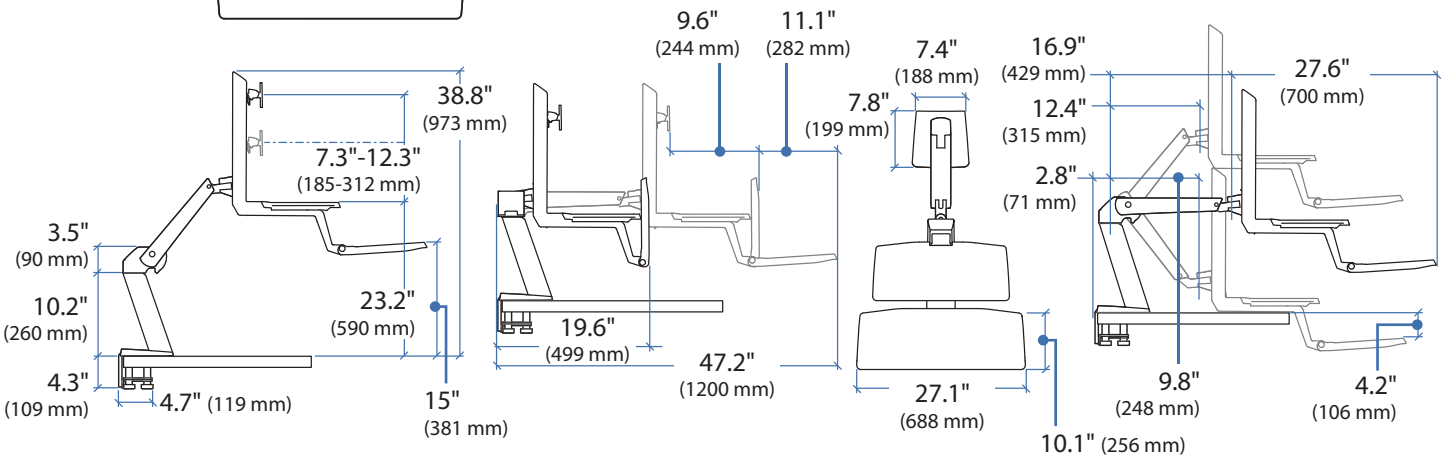

see page 4 for Desk Specifications.

© 2014 Ergotron, Inc. rev. 06/30/2014 DIM-WorkFit-A-dropdownKB Content is subject to change without notification

Americas Sales and Corporate Headquarters	EMEA Sales	APAC Sale	Worldwide OEM Sales
St. Paul, MN USA (800) 888-8458 +1-651-681-7600 www.ergotron.com sales@ergotron.com	Amersfoort, The Netherlands +31 33 45 45 600 www.ergotron.com info.eu@ergotron.com	Tokyo, Japan www.ergotron.com apaccustomerservice@ergotron.com	www.ergotron.com info.oem@ergotron.com

ERGOTRON®

Ergotron®

Dimensional & Range of Motion Illustrations

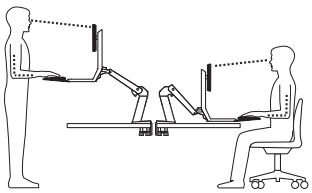

WorkFit-A, Dual

Weight Capacity:

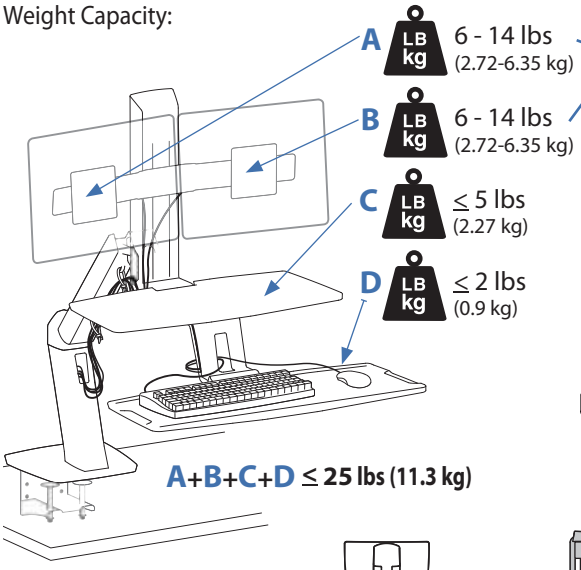

A+B= 9-20 lbs (4.1-9.1 kg)

Range of Motion

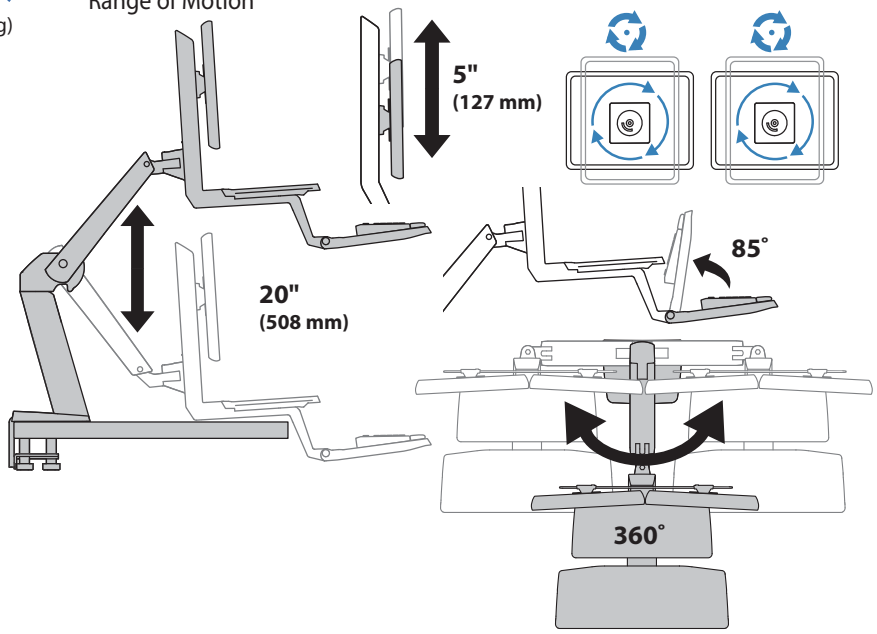

Dimensions

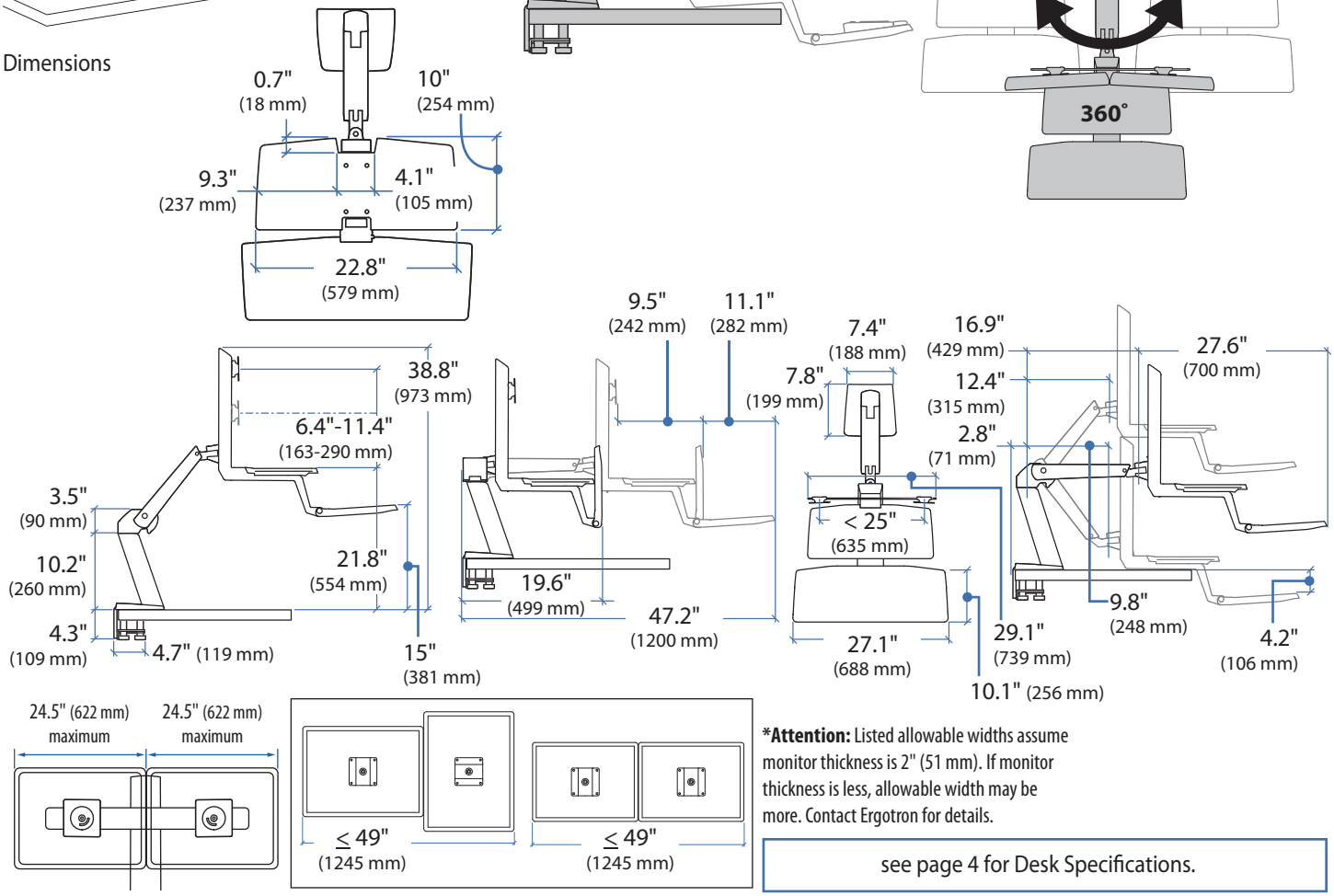

***Attention:** Listed allowable widths assume monitor thickness is 2" (51 mm). If monitor thickness is less, allowable width may be more. Contact Ergotron for details.

see page 4 for Desk Specifications.

© 2014 Ergotron, Inc. rev. 06/30/2014 DIM-WorkFit-A-dropdownKB Content is subject to change without notification

Americas Sales and Corporate Headquarters	EMEA Sales	APAC Sale	Worldwide OEM Sales
St. Paul, MN USA (800) 888-8458 +1-651-681-7600 www.ergotron.com sales@ergotron.com	Amersfoort, The Netherlands +31 33 45 45 600 www.ergotron.com info.eu@ergotron.com	Tokyo, Japan www.ergotron.com apaccustomerservice@ergotron.com	www.ergotron.com info.oem@ergotron.com

Ergotron®

Dimensional & Range of Motion Illustrations

WorkFit-A

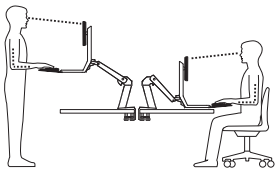

Desk Dimensions:

Clamp

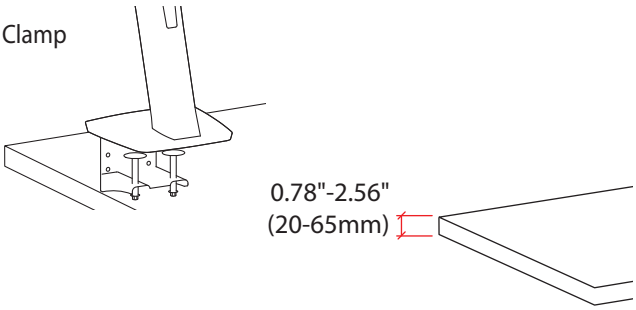

Grommet

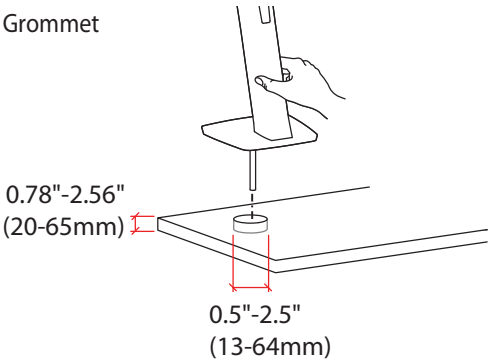

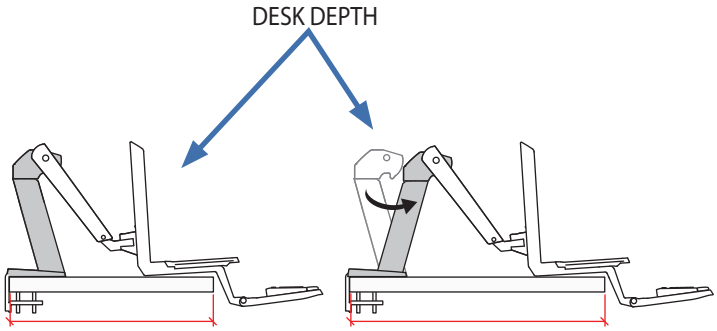

Max: 25.5" (648mm)

Max: 31.5" (800mm)

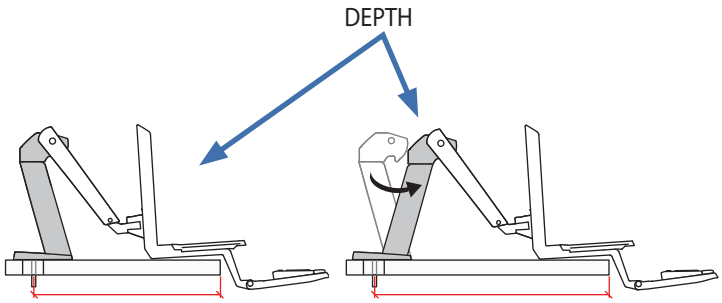

Max: 23.5" (597mm)

Max: 29.5" (749mm)

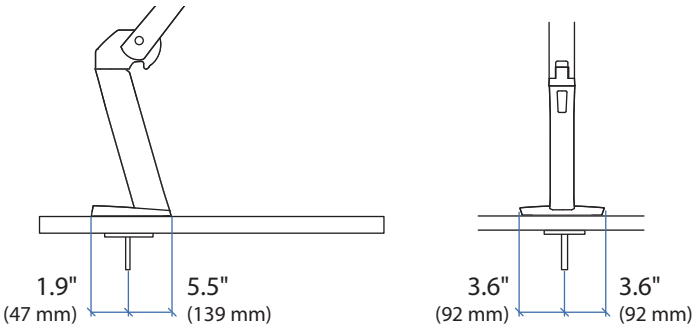

© 2014 Ergotron, Inc. rev. 06/30/2014 DIM-WorkFit-A-dropdownKB Content is subject to change without notification

Americas Sales and Corporate Headquarters	EMEA Sales	APAC Sale	Worldwide OEM Sales
St. Paul, MN USA (800) 888-8458 +1-651-681-7600 www.ergotron.com sales@ergotron.com	Amersfoort, The Netherlands +31 33 45 45 600 www.ergotron.com info.eu@ergotron.com	Tokyo, Japan www.ergotron.com apaccustomerservice@ergotron.com	www.ergotron.com info.oem@ergotron.com