UniFi® Protect G4 Doorbell

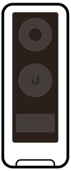
a

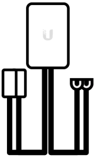
b

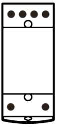
c

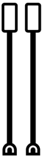
d

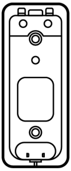
e

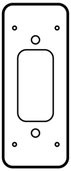
f

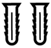
g

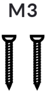

h

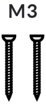

i

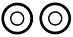
j

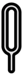
k

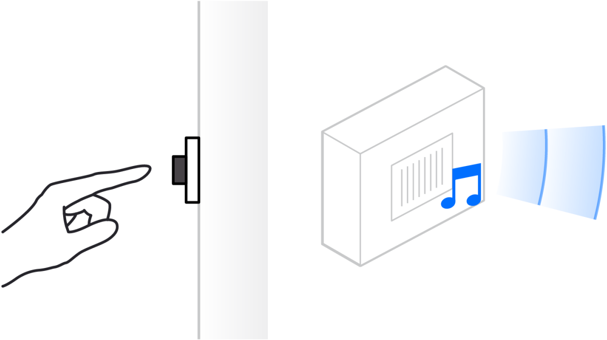

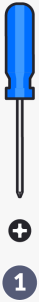

1

ui.com/install

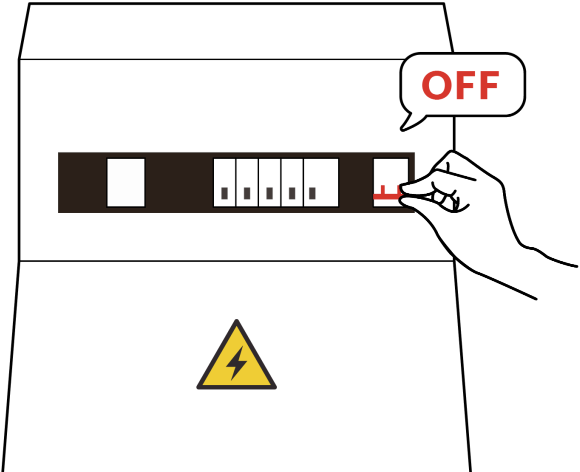

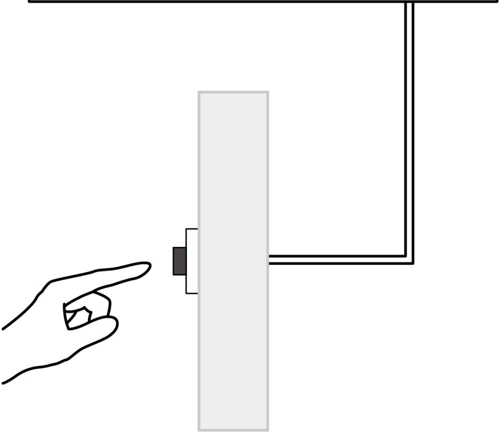

2

ui.com/install

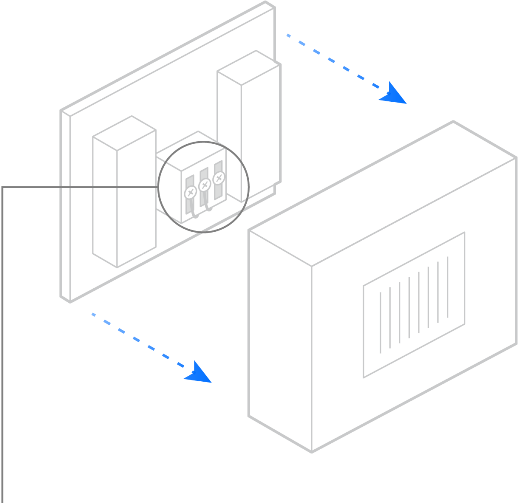

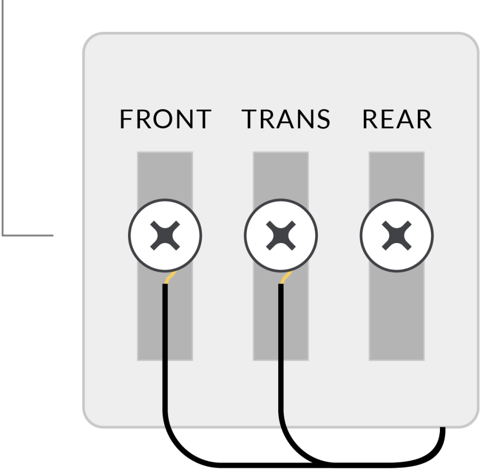
FRONT
TRANS
REAR

3

ui.com/install

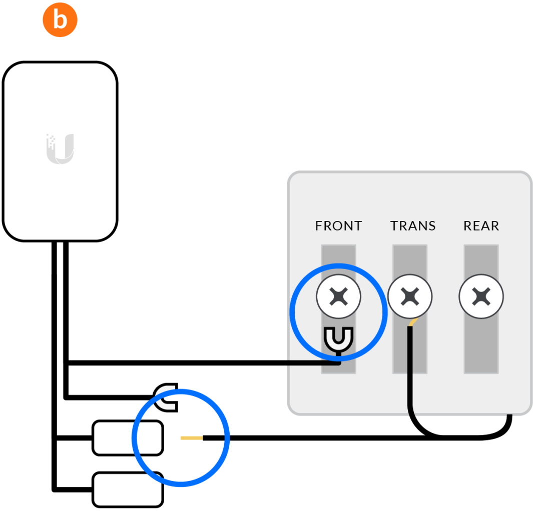
b
FRONT
TRANS
REAR

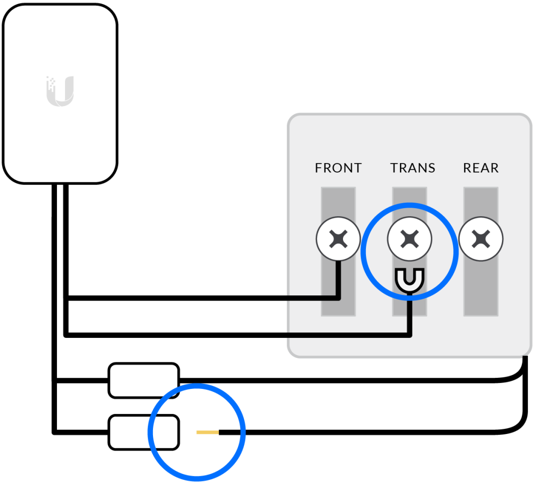
FRONT
TRANS
REAR

5

ui.com/install

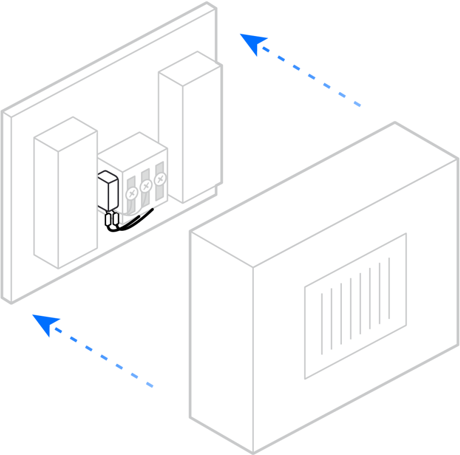

6

ui.com/install

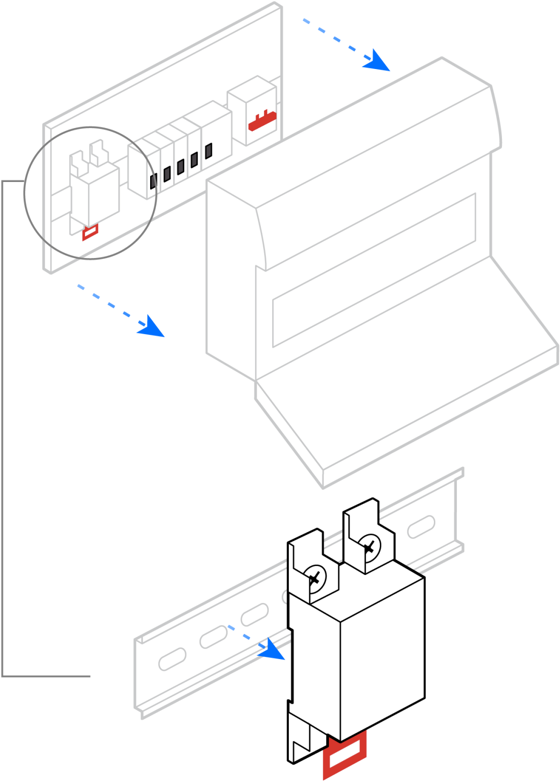

7

ui.com/install

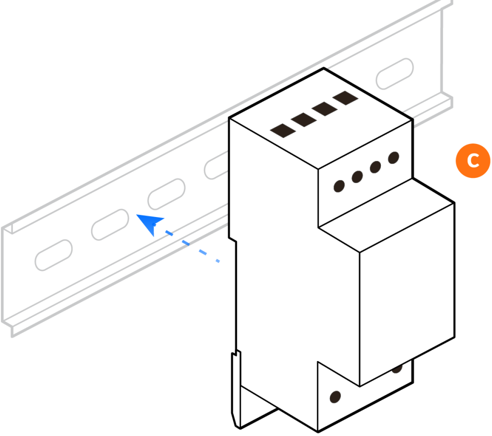

8

ui.com/install

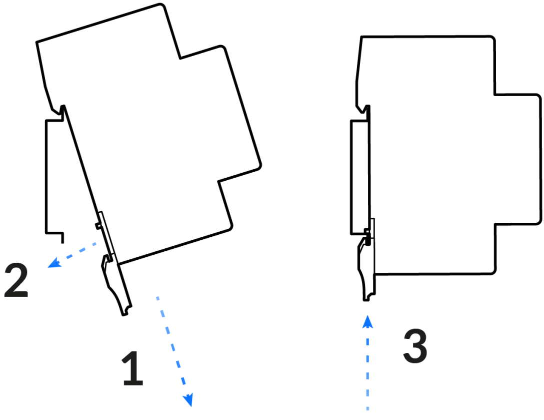

9

ui.com/install

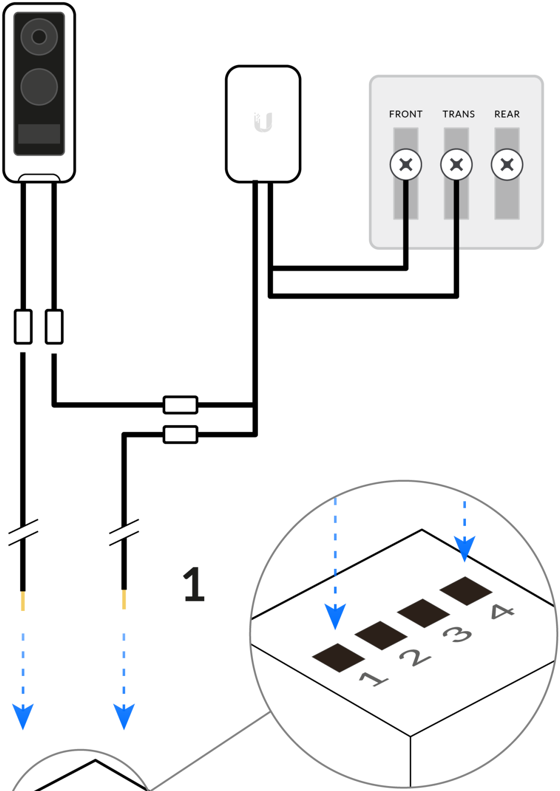
FRONT
TRANS
REAR
1
1
2
3
4

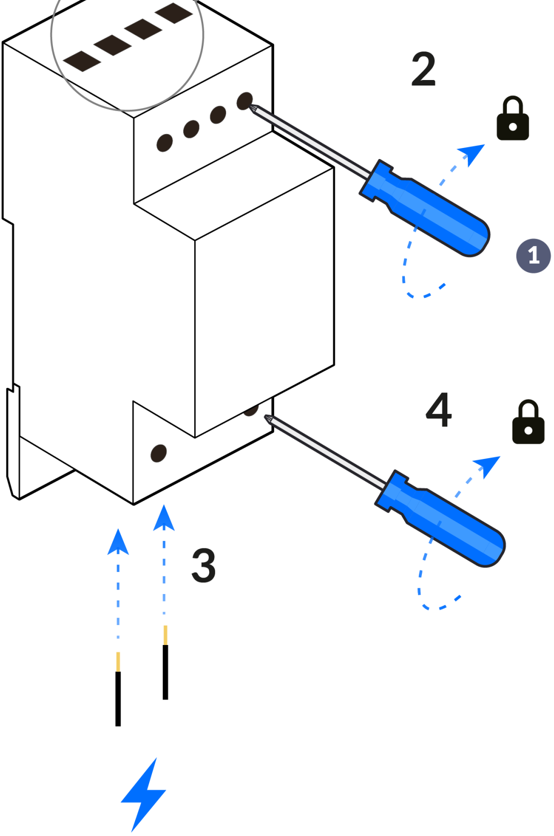

AC 220-240V

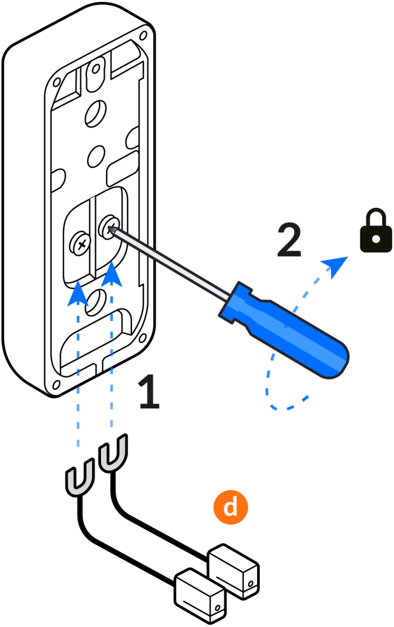

A

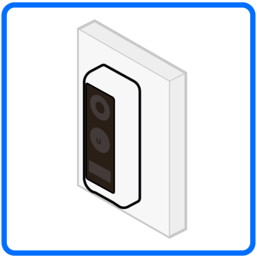

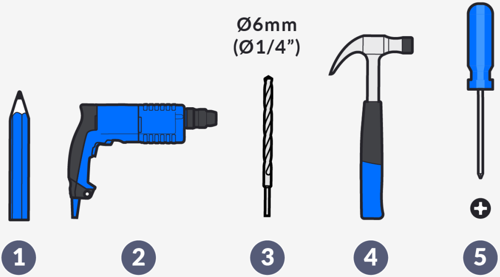
Ø6mm
(Ø1/4")
1
2
3
4
5

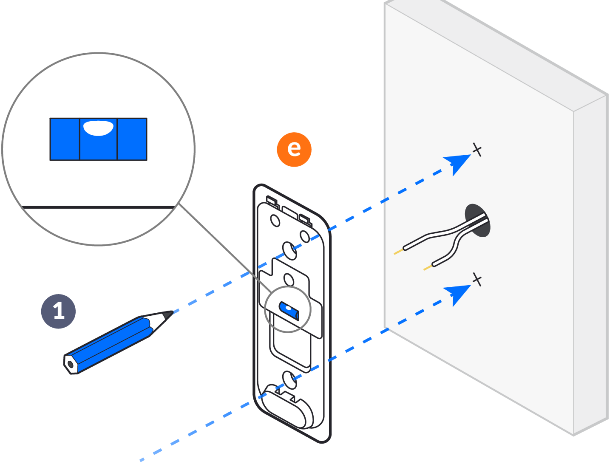

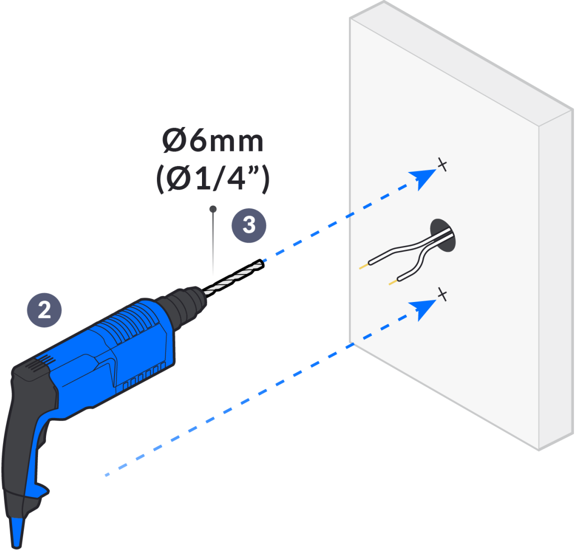

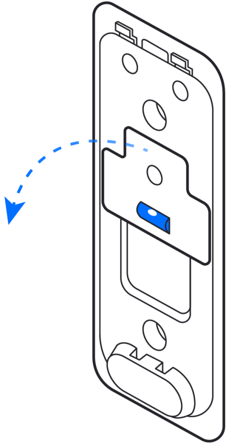

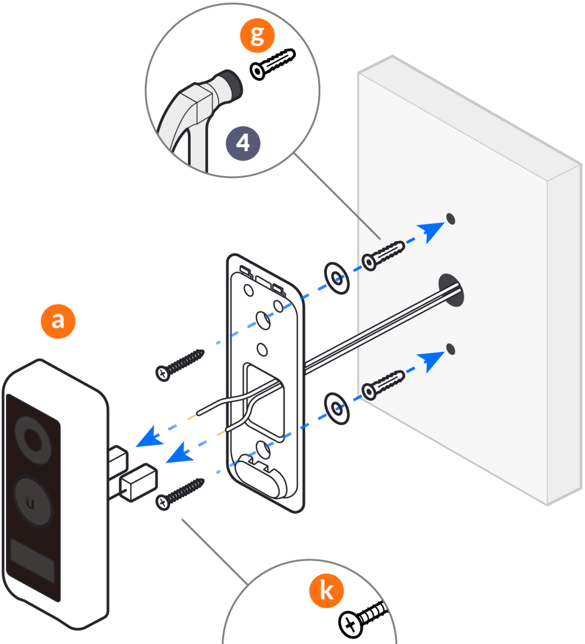

B

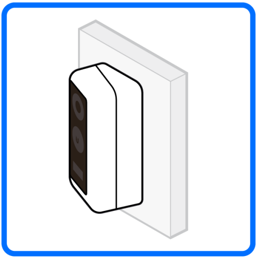

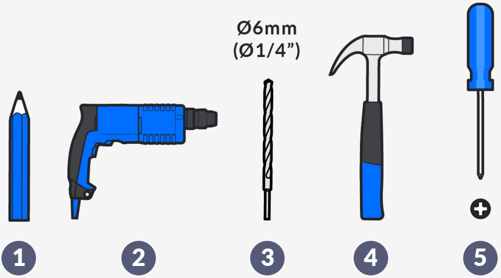
Ø6mm
(Ø1/4”)
+
1
2
3
4
5

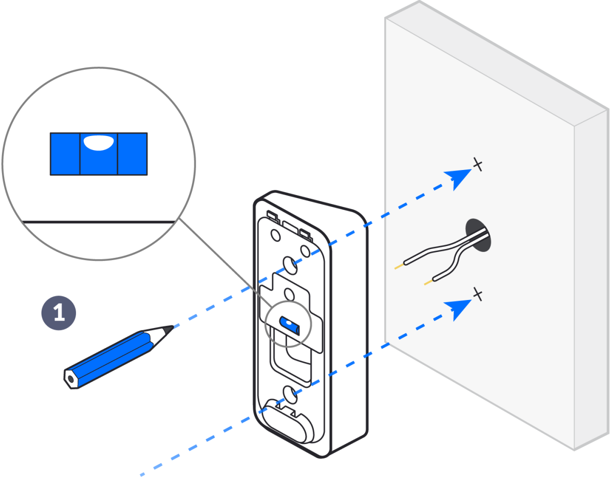

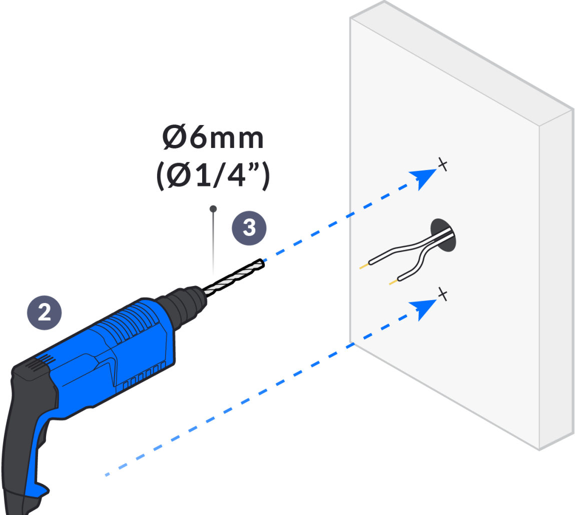

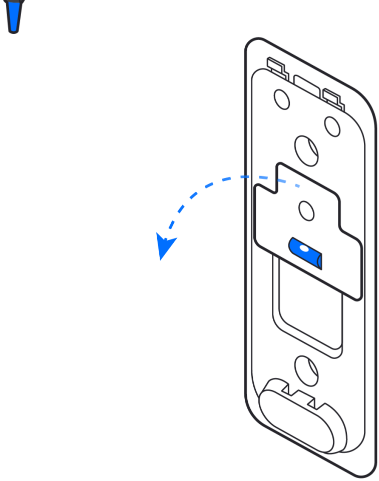

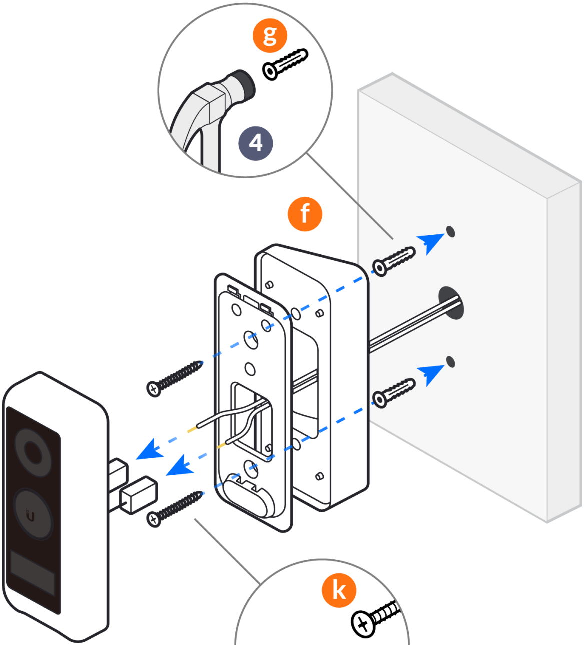

12

ui.com/install

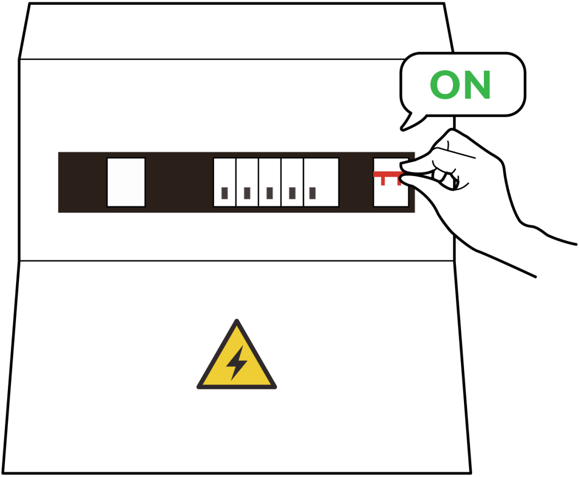

13

ui.com/install

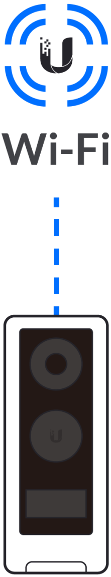

14

ui.com/install

Download on the App Store

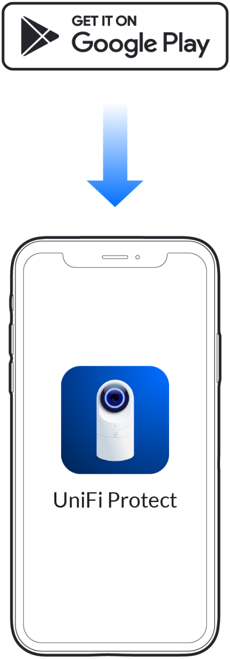
GET IT ON
Google Play
UniFi Protect

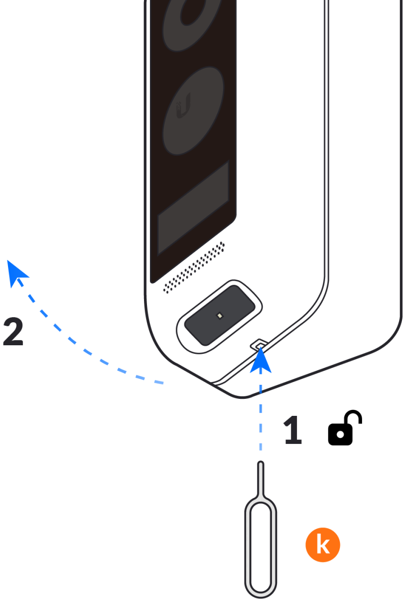

Get Answers
help.ui.com

UniFi Protect

Installation Video

UI Support